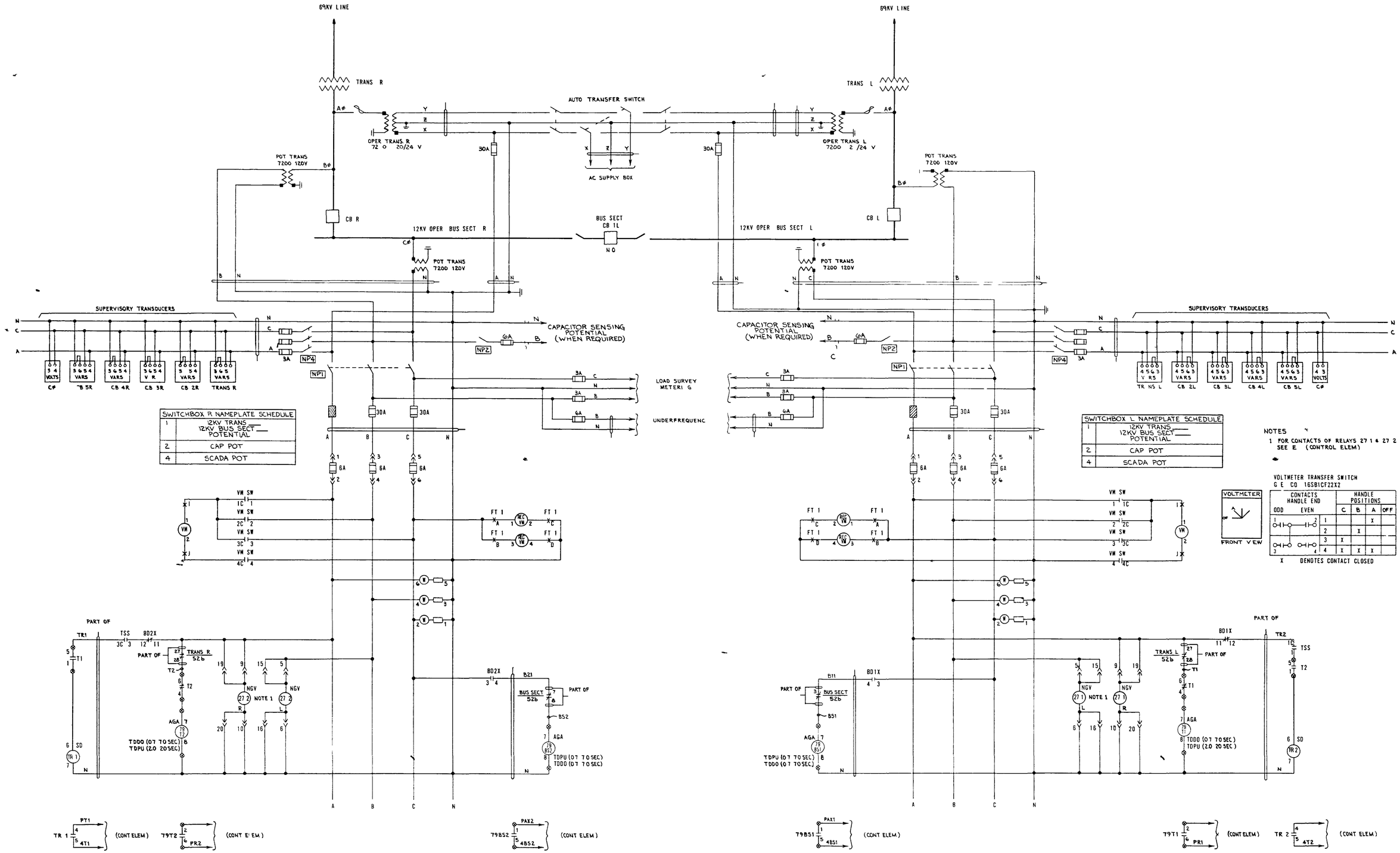

SWITCHBOX R NAMEPLATE SCHEDULE	
1	12KV TRANS ___ 12KV BUS SECT ___ POTENTIAL
2	CAP POT
4	SCADA POT

SWITCHBOX L NAMEPLATE SCHEDULE	
1	12KV TRANS ___ 12KV BUS SECT ___ POTENTIAL
2	CAP POT
4	SCADA POT

NOTES

1 FOR CONTACTS OF RELAYS 27 1 & 27 2 SEE E (CONTROL ELEM)

VOLTMETER TRANSFER SWITCH
G E CO 16SB1CF22X2

CONTACTS HANDLE END ODD	EVEN		HANDLE POSITIONS C	B	A	OFF
1	2	1			X	
		2		X		
3	4	3	X			
		4	X	X	X	

X DENOTES CONTACT CLOSED

NOTF THE DRAWINGS (DLB 1-6) DO NOT COVER THE SAME EQUIPMENT AND ARE ISSUED TO CUSTOMERS AS A REFERENCE FOR CONTENT ONLY

ER	EXAMPLE DRAWING FOR CUSTOMER OWNED GENERATION
ER	POTENTIAL ELEMENTARY
ER	
SCALE NONE	
DATE	
DRAWN	PENNSYLVANIA POWER & LIGHT COMPANY
CHECKED	
LEADER	
APPROVED	DLB-6
APPROVED	

REFERENCE TITLE	NUMBER	REFERENCE TITLE	NUMBER	NO	DATE	ER	REVISION	BY	CH	APPROVED	NO	DATE	ER	REVISION	BY	CH	APPROVED