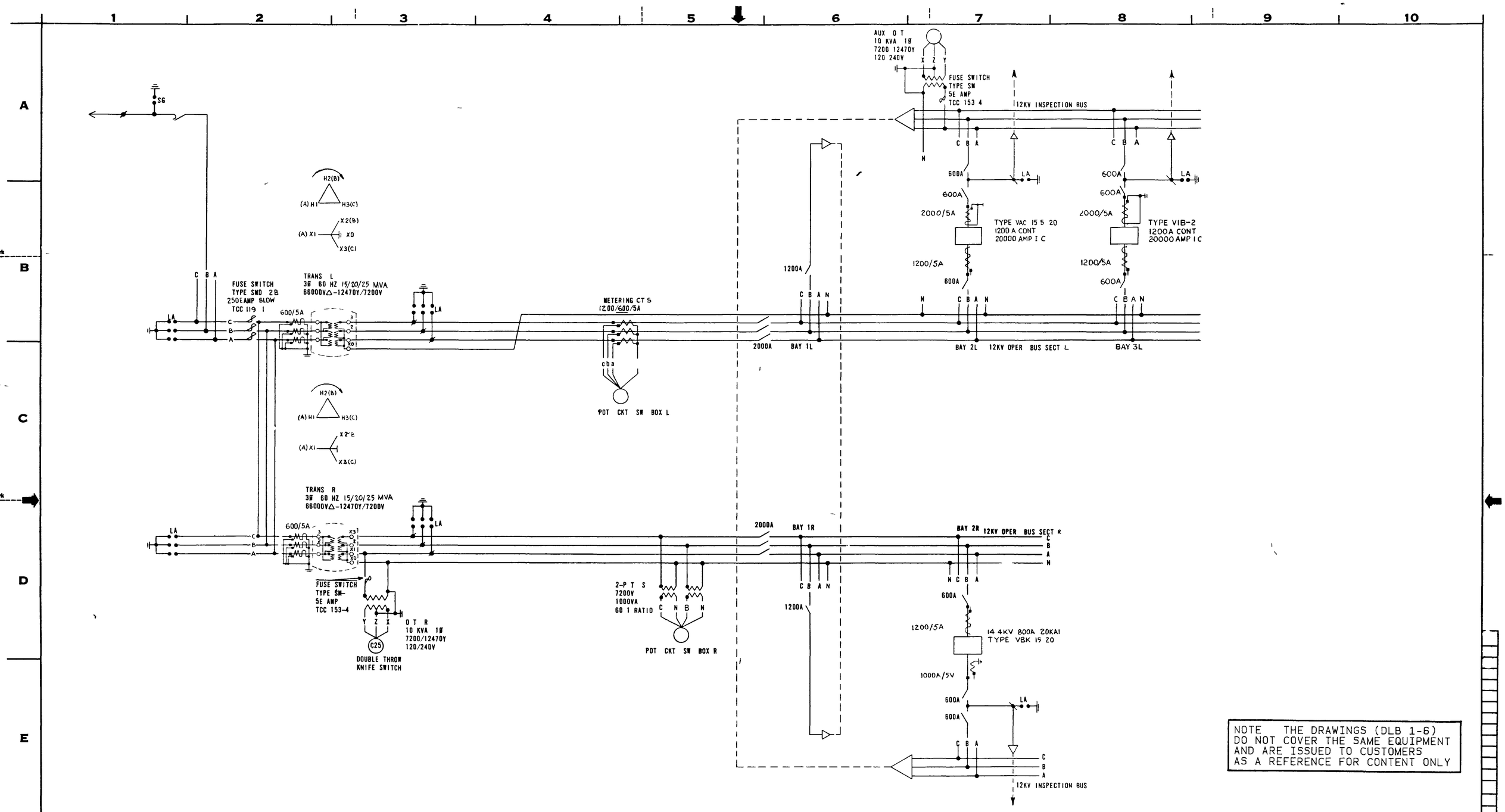

NOTE THE DRAWINGS (DLB 1-6) DO NOT COVER THE SAME EQUIPMENT AND ARE ISSUED TO CUSTOMERS AS A REFERENCE FOR CONTENT ONLY

ER	EXAMPLE DRAWING FOR CUSTOMER OWNED GENERATION
ER	
ER	
SCALE NONE	THREE LINE DIAGRAM
DATE	
DRAWN	PENNSYLVANIA POWER & LIGHT COMPANY
CHECKED	
LEADER	
APPROVED	DLB-5
APPROVED	

REFERENCE TITLE | NUMBER | NO | DATE | ER | REVISION | BY | CH | APPROVED

FRACTIONAL SCALE | DECIMAL SCALE | LOC CODE | DESCRIPTION | SORT