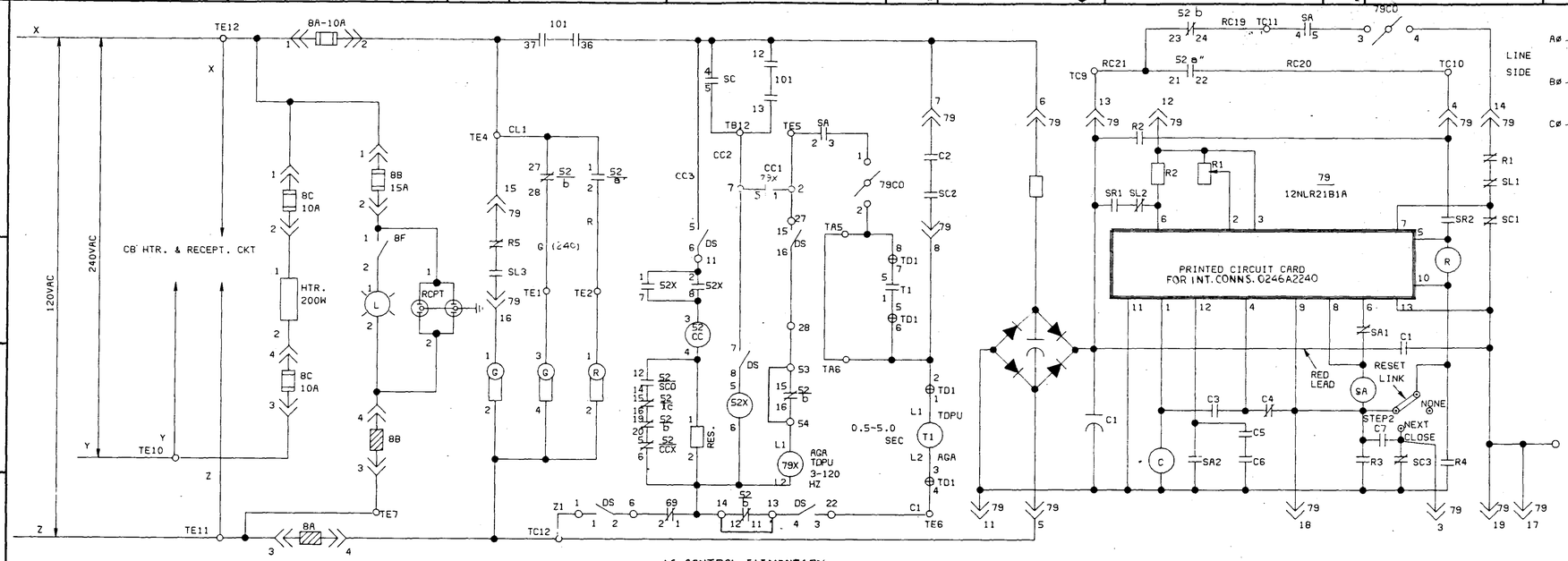

AC CONTROL ELEMENTARY
CLOSE, MOTOR, HEATERS AND AUX. CKT'S.

101 PCB CONT SW

DECK	CONTACTS HANDLE END		CLOSE	NORM AFTER CLOSE	NORM AFTER TRIP	TRIP
ELECTROSWITCH-2443D			POSITIONS (REAR VIEW)			
1	12–13	12	X			
		13	X			
	15–14	14				X
		15				X
	16–17	16	X			
		17	X			
2	21–22	21		X	X	
		22		X	X	
3	32–33	32	X	X		
		33	X	X		
	36–37	36	X	X		
		37	X	X		

X = DENOTES CONTACT CLOSED

AM SW

DECK	CONTACTS HANDLE END		3	*	*	*	2	*	*	*	1
ELECTROSWITCH-2411C			POSITIONS (REAR VIEW)								
1	11–13, 14, 15, 16, 17	13								X	X
		14						X	X	X	
		15				X	X	X			
		16		X	X	X					
		17	X	X							
2	21–23, 24, 25, 26, 27	23								X	X
		24						X	X	X	
		25				X	X	X			
		26		X	X	X					
		27	X	X							
3	31–33, 34, 35, 36, 37	33								X	X
		34						X	X	X	
		35				X	X	X			
		36		X	X	X					
		37	X	X							
4	41–43, 44, 45, 46, 47	43								X	X
		44						X	X	X	
		45				X	X	X			
		46		X	X	X					
		47	X	X							
5	51–53, 54, 55, 56, 57	53								X	X
		54						X	X	X	
		55				X	X	X			
		56		X	X	X					
		57	X	X							
6	61–63, 64, 65, 66, 67	63								X	X
		64						X	X	X	
		65				X	X	X			
		66		X	X	X					
		67	X	X							

*=INTERMEDIATE POSTIONS
X=DENOTES CONTACT CLOSED

DEVICE NO.	EQUIPMENT
8D	TRIP CONTROL POWER FUSE
8C	HEATER POWER FUSE
8B	120V AC SERVICE FUSE
8A	CLOSING CONTROL, POWER & MOTOR FUSE
TD3	TEST DEVICE, 4 POLE
TD1,2	TEST DEVICE, 6 POLE
ST	SUPERVISORY AUX. TRIP RELAY
SC	SUPERVISORY AUX. CLOSE RELAY
SA	SUPERVISORY AUTO. RECLOSURE BLOCKING RLY.
R	RED INDICATING LAMP
LDAM	LINCOLN DEMAND AMMETER
L	LAMP
HTR	STRIP HEATER
G	GREEN INDICATING LAMP
TI	TIMING RELAY
AM.SW.	AMMETER SWITCH
AM	INDICATING AMMETER
79CO	RECLOSER CUT OFF SWITCH
79	RECLOSING RELAY
69	HAND TRIP & LOCK OUT DEVICE
101	PCB CONTROL SWITCH
52b	AUX.SW. CLOSED WHEN BREAKER IS OPEN
52a	AUX.SW. OPEN WHEN BREAKER IS OPEN
52	POWER CIRCUIT BREAKER
51G	TIME OVERCURRENT RELAY (GROUND RELAY)
50H	HIGH SET INSTANTANEOUS OVERCURRENT RLY. (IIT)
50/51	PHASE OVERCURRENT RELAY (CO, IT)
51G/CO	GROUND RELAY BLOCKING SWITCH
8F	LIGHT SWITCH, SPST
8E	SUPERVISORY CONTROL POWER FUSE

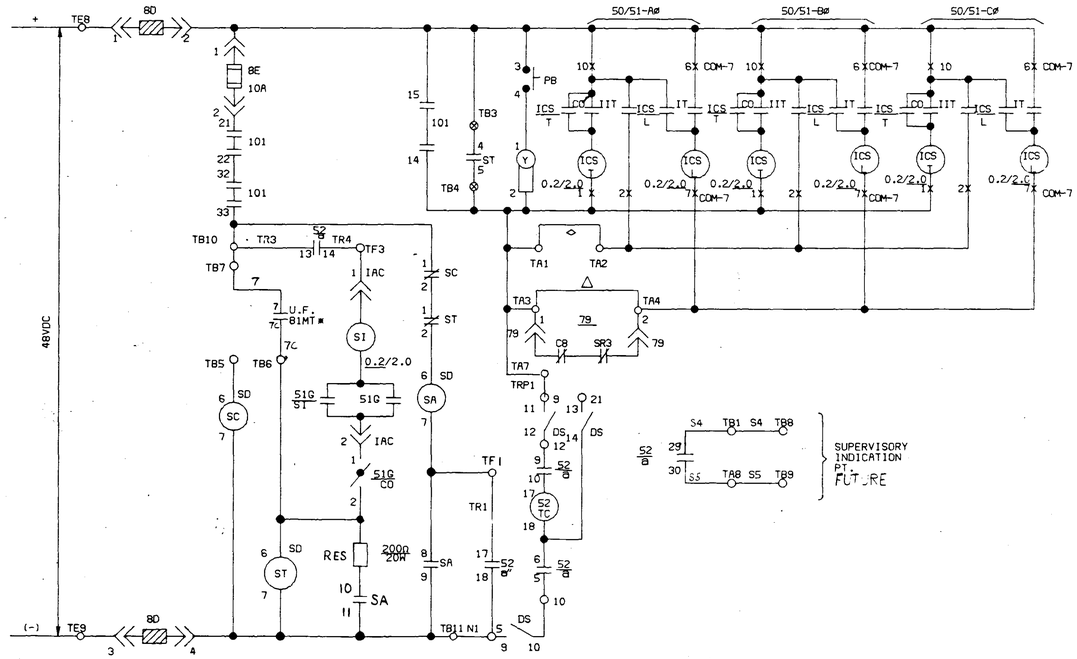

DC CONTROL ELEMENTARY
TRIP AND SUPV. CONTROL CIRCUITS

LEGEND:

- ⊗ STATES TYPE NT LINK-TEST POINT
- ⊕ PK-2 TEST BLOCK
- ○ STATES TYPE NT LINKS-TERMINATION POINT
- △ LOW SET INSTANTANEOUS JUMPER - WITH LINKS TA3 & TA4 OPEN, THE INSTANTANEOUS ELEMENT OF 50 IS CUT OUT AFTER FIRST TRIP. WITH LINKS CLOSED, THE INSTANT ELEMENT IS IN TRIP CIRCUIT AT ALL TIMES.
- ◇ HIGH SET INSTANTANEOUS JUMPER - OPEN LINKS TA1 & TA2 IF HIGH SET INSTANTANEOUS OVERCURRENT IS NOT IN SERVICE.
- ■ REMOTE CONTACT

NOTE: THE DRAWINGS (DLB 1-6) DO NOT COVER THE SAME EQUIPMENT AND ARE ISSUED TO CUSTOMERS AS A REFERENCE FOR CONTENT ONLY.

48VDC TRIP CIRCUIT

ER-
ER-
SCALE-
DATE-
DRAWN-
CHECKED-
LEADER-
APPR'D-
APPR'D-

EXAMPLE DRAWING FOR CUSTOMER OWNED GENERATION
AC/DC CONTROL AND CURRENT ELEMENTARY

PENNSYLVANIA POWER & LIGHT COMPANY

DLB-2

REFERENCE TITLE | NUMBER | NO. | DATE | ER | REVISION | BY | CH. | APPROVED

LOC CODE | DESCRIPTION | SORT

ADD'L LOC CODES